Current part is item (1) on diagram. Available at www.oshkoshequipment.com

(1) GROUP (a) FIG. NO.	(2) (b) ITEM NO.	(3) SMR CODE	(4) NATIONAL STOCK NUMBER	(5) PART NUMBER	(6) FSCM	DESCRIPTION USABLE ON CODE	(7) U/M	(8) QTY INC IN UNIT
						0609-LIGHTS (CONT'D)		
70	13	PAOZZ	5310-00-350-2655	5294507	19207	WASHER,MOUNTING	EA	1
70	14	PAOZZ	6220-00-456-6106	8747986	19207	BODY ASSEMBLY	EA	1
71	1	PAOOO	6220-00-337-6471	MS51330-1	96906	STOPLIGHT-TAILLIGHT,VEHICULAR: RIGHT AA	EA	1
71	2	PAOZZ	6220-00-752-6018	7526018	21450	DOOR ASSEMBLY,TAILLIGHT: FLANGE MTG, W/SCREWS AA	EA	1
71	3	PAOZZ	5330-00-297-7106	7320658	19207	PACKING,PREFORMED: DOOR AA	EA	2
71	4	PAOZZ	6240-00-019-0877	MS15570-1251	96906	LAMP,INCANDESCENT:TAILLIGHT AA	EA	2
71	5	PAOZZ	6250-00-353-0955	8378662	19207	SOCKET,W/WIRING AA	EA	1
71	6	PAOZZ	5305-00-889-3002	MS35206-242	96906	SCREW AA	EA	2
71	7	PAOZZ	5310-00-045-3299	MS25338-43	96906	WASHER AA	EA	2
71	8	PAOZZ	5305-00-984-6191	MS35206-243	96906	SCREW AA	EA	3
71	9	PAOZZ	5325-00-507-8761	8694525	19207	GROMMET AA	EA	1
71	10	XAOZZ		7529242	19207	BODY AA	EA	1
72	1	PAOOO	6220-00-500-0437	8376368	19207	LIGHT, MARKER:FRONT (COMPONENTS SAME AS LIGHT, NSN 6220-00-669-5623, EXCEPT AA,AB, WHERE ANNOTATED) AC	EA	2
72	1	PAOOO	6220-00-846-9745	MS51302-1	19207	B.O. STOPLIGHT,RIGHT AB,AC	EA	1
72	1	PAOOO	6220-00-669-5623	8378785	19207	STOPLIGHT-TAILLIGHT: (ONLY ONE AA,AB, USED ON GASOLINE MODELS AC	EA	2
72	2	PAOZZ	6220-00-752-6020	7526020	19207	DOOR ASSEMBLY:(USED ON LIGHT, NSN 6220-00-669-5623, ONLY)	EA	1
72	2	PAOZZ	6220-00-752-6030	7526030	19207	DOOR: (USED ON LIGHT, NSN 6220-00-500-0437, ONLY)	EA	1
72	3	PAOZZ	5330-00-297-7106	7320658	19207	PACKING, PREFORMED: DOOR	EA	1
72	4	PAOZZ	6240-00-019-0877	MS15570-1251	96906	LAMP,INCANDESCENT	EA	2
72	5	PAOZZ	6240-00-044-6914	MS35476-1683	96906	LAMP,INCANDESCENT	EA	1
72	6	PAOZZ	2590-00-693-3452	8378661	19207	SOCKET AND WIRING ASSEMBLY: (USED ON LIGHT, NSN 6220-00-669-5623, ONLY)	EA	1
72	6	PAOZZ	6220-00-545-8618	8376369	19207	SOCKET AND WIRING ASSEMBLY: (USED ON LIGHT, NSN 6220-00-500-0437, ONLY)	EA	1
72	7	PAOZZ	5305-00-889-3002	MS35206-242	96906	SCREW	EA	2
72	8	PAOZZ	5310-00-045-3299	MS35338-42	96906	WASHER	EA	2
72	9	PAOZZ	5305-00-984-6191	MS35206-243	96906	SCREW	EA	3
72	10	PAOZZ	5365-00-507-8762	8694526	19207	GROMMET	EA	1
72	11	PAOZZ	6220-00-368-4945	7525997	19207	BODY	EA	1

Current part is item (1) on diagram. Available at www.oshkoshequipment.com

Current part is item (1) on diagram. Available at www.oshkoshequipment.com

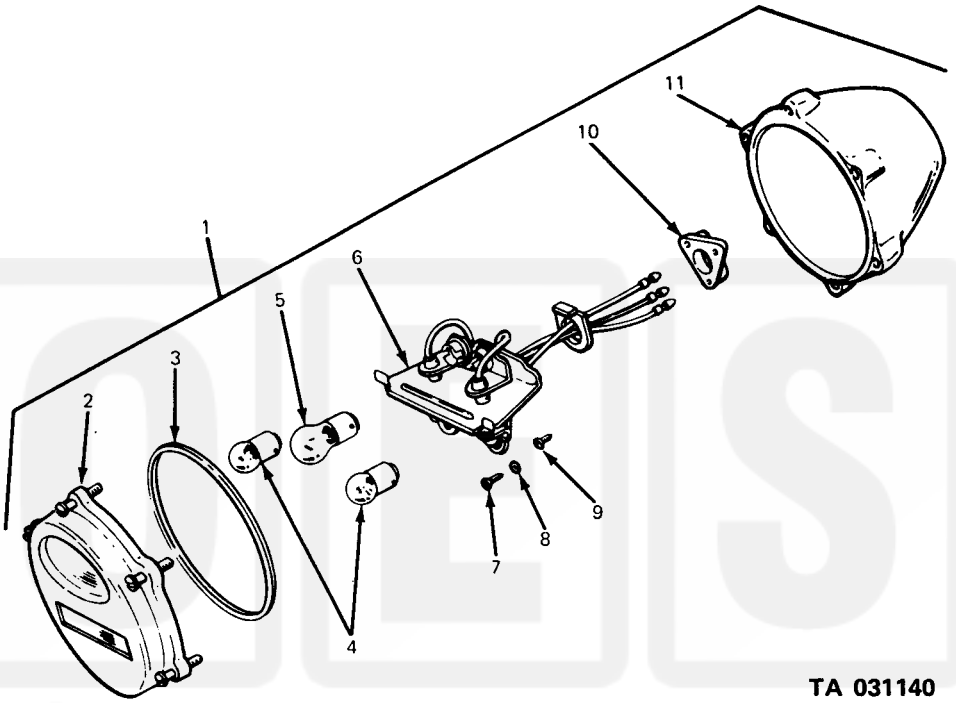

Fire 72. Stoplight-taillight assembly.

Current part is item (1) on diagram. Available at www.oshkoshequipment.com